CAPITAL
LIGHTING FIXTURE COMPANY

ASSEMBLY AND INSTALLATION INSTRUCTIONS for the ***9918*** Outdoor Fixture

Important Safety information (Please read before proceeding)

1. Remove the fixture, parts and all mounting hardware bags (orange) from the carton and verify that all parts are present according to the illustration sheet. All parts must be used as indicated. Do not replace any parts, leave any parts out, or use any parts which are worn out or broken. **Failure to follow the instructions could cause a hazardous situation, voids the warranty and violates the U.L. listing of the fixture.**
2. To prevent the electric shock, turn off the main power at the circuit breaker before installing the fixture. **NEVER attempt to install, clean or replace bulbs without shutting off the electricity to the fixture.**
3. **Never use light bulbs with wattage ratings that exceed the fixtures maximum rating.** Always make sure the electric current is turned off before changing the bulbs.
4. If you experience difficulties installing the lighting fixture or it fails to work as expected, please contact a local qualified licensed electrical contractor.
5. Please contact your local Capital Lighting Fixture reseller with any assembly or installation questions. Your local reseller can also provide you with replacement parts for your new fixture.

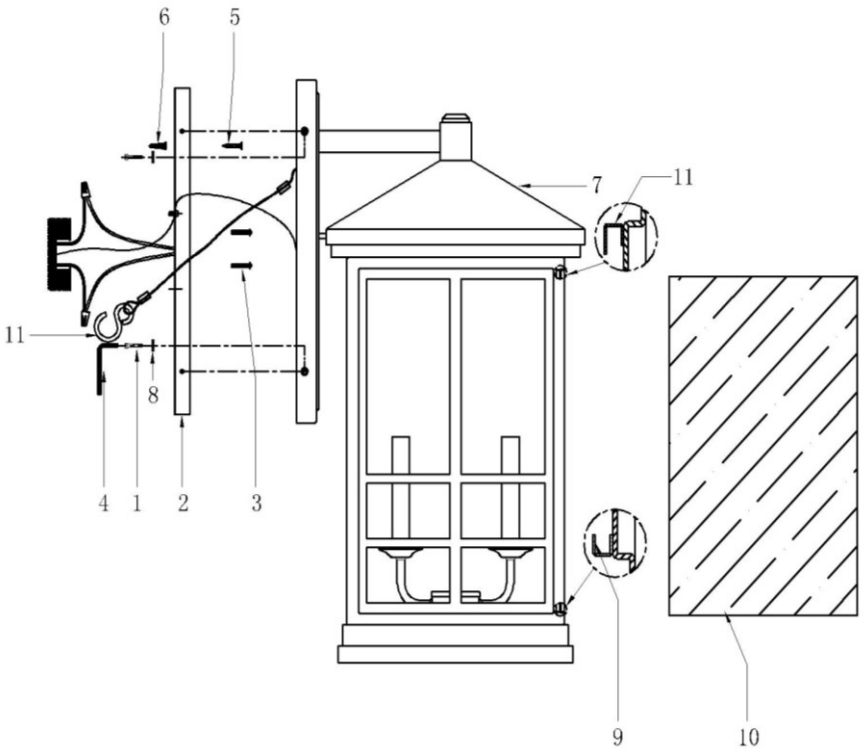

Components

1. Mounting Screw
2. Mounting Bracket
3. Outet Box Mounting Screws
4. Allan Wrench
5. Wood Screw
6. Plastic Anchor
7. Fixture
8. Rubber Washer
9. Glass Channel
10. Glass Panel
11. Glass tab
12. Safety Cable w/Hook

Assembly Instructions for the 9918 outdoor fixture

1. Insert Glass Panel (10) into Glass Channel (09) of fixture cage, then secure them with Glass Tab (11) tightly.
2. Assemble Mounting Bracket (02) to mounting surface using hardware suitable for material of mounting surface. Mark position of holes on mounting surface before using provided Plastic Anchors (06), drill appropriate holes and assemble as illustrated.
3. Attach Mounting Bracket (02) to Outlet Box with Outlet Box Mounting Screws (03), and to mounting surface with Wood Screws (05) tightly.
4. Put Fixture Canopy (07) toward outlet box, then hang it on Mounting Bracket (02) with Safety Cable w/Hook (12) as the illustration shown. *Note: This will allow for fixture to be supported while wire connections are made.*
5. Connect fixture ground wire to outlet box ground wire with wire connector supplied; connect white fixture wire to the white power supply wire with wire connector supplied; connect black fixture wire to the black power supply wire with wire connector supplied.
6. Push Fixture Canopy (07) to mounting surface, make sure mounting holes in Fixture Canopy (07) and Mounting Bracket (02) are in line, verify all wires are securely inside Fixture Canopy (07) and Mounting Bracket (02), and carefully passing Mounting Screws (01) with Rubber Washer (08) through holes, then secure Fixture Canopy (07) to mounting surface with Mounting Screws (01) and Allan Wrench (04).

Note: Guide for Outdoor Mounting Fixture and/or in Wet Locations:

1.Mounting surface should be clean, dry, flat and 1/4" larger that the canopy on all sides. Any gaps between mounting surface and canopy exceeding 3/16" should be corrected as required.

2.Use silicone caulking compound (notprovided), caulk completely around where back of canopy meets the wall surface to prevent water from seeping into outlet box.